14Gen-125H 155H-4 LAN + 12 Bay NAS-MTL-10G

Motherboard Main Features：

Model: NAS-MTL-10G

- Intel 14th Generation Meteor Ultra H high-performance integrated NPU AI computing power series
- 170mm*170mm standard iTX board, compatible with LGA115X/1700 radiator
- 3 SFF-8643 ports, one with four SATA3.0 ports, supports 12 drive slots
- 3 RJ45 network ports with different speeds, 1 x 10G network port + 1 x 2.5G network ports + 1 x 2.5G network port
- Intel i226-LM supports vPro remote management function
- 2 M.2 NVMe Gen4 2280 slots x4 signal
- 1 Type-C (USB4.0) theoretical rate 40G
- 2 SO-DIMM DDR5 memory slots, 1 slot each on the front and back, single slot up to 48G
- 1 PCI-E Gen4 x 8 slot supports expansion ofgraphics card/ network card/array card, etc.
- 1 USB 3.0 female connector + 1 Type-E female connector compatible with the latest NAS chassis
- HDMI+DP+Type-C+eDP four display interfaces all support 4K@60Hz

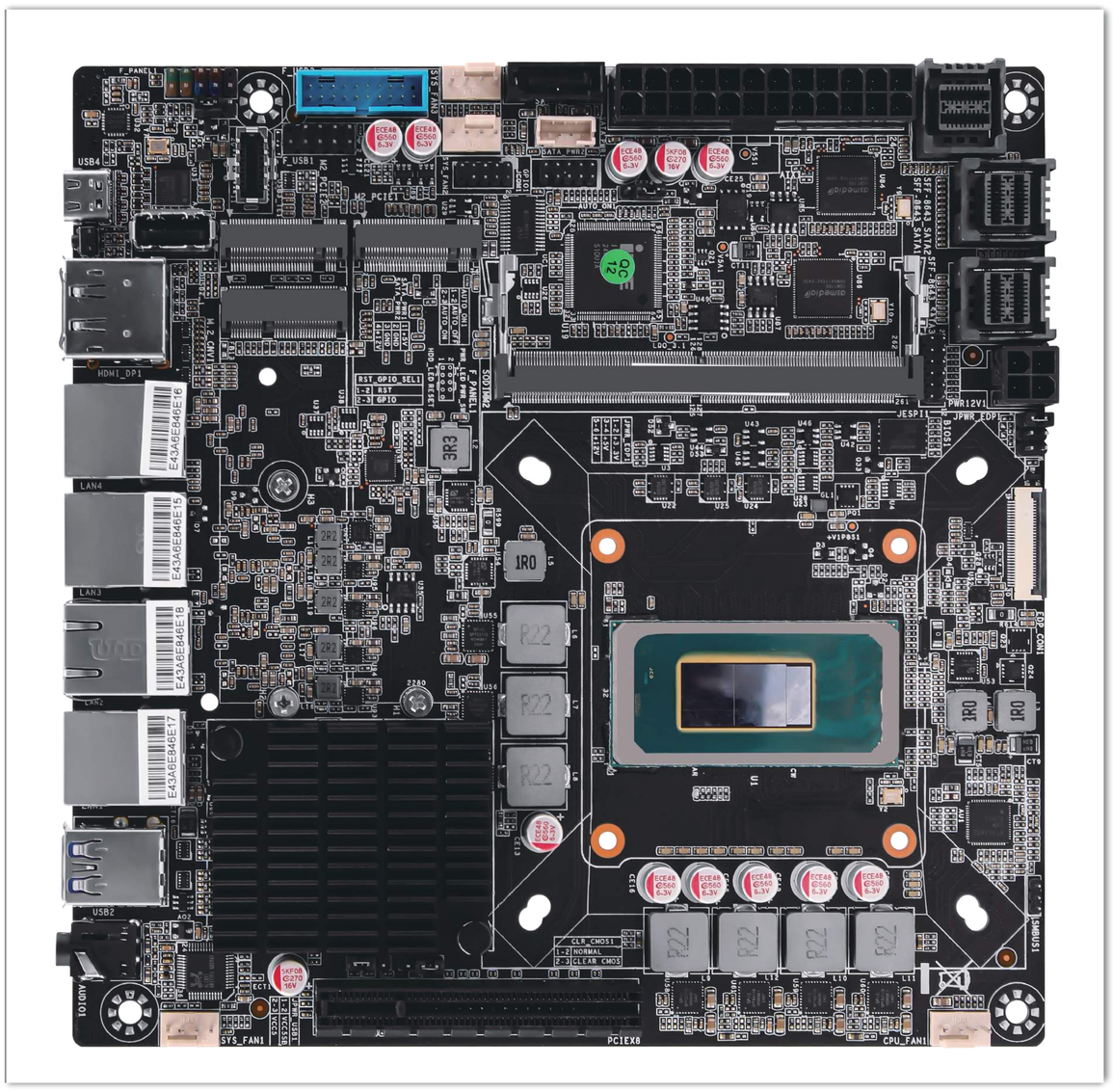

intel | PCI-E x8 | 2500 Giga LAN | DDR5 X2 | 10G Giga LAN | 5G Giga LAN | Dual M.2 | SFF-8643 | Fan | USB4

Specification

Specifications	
Motherboard Features	- Black PCB - 12-layer high-density fiber optic circuit board - Fully protected (supports all USB, audio, and network interfaces)
CPU	- Optional Intel 14th-generation Meteor Lake U/H processors - Up to Intel Ultra9 185H processor with 16 cores and 22 threads - Power consumption of 45W, with a maximum turbo boost of 115W - Support for Intel Deep Learning (AI)
Memory	- Supports SO-DIMM DDR5 laptop memory technology - 2 x SO-DIMM DDR5 memory slots - DDR5 supports 5600MHz and is backward compatible with 4800/ 5600MHz - Maximum capacity per memory stick is 48GB, with two memory sticks providing a total of 96GB
TDP	- Basic power consumption 45W (maximum turbo power consumption 115W)
Storage	- 2 * M.2 NVMe PCIe 4.0 x4 signals (2280) - 3 * SFF-8643 interfaces (expandable to 12 SATA 3.0 signals)- 1 * SATA 3.0 interface - 1 * TF card storage
Network card	- 1 * Intel i226-LM 2.5G RJ45 port - 2 * RTL-8126 5G RJ45 ports - 1 * AQC113-B1-C 10G RJ45 port
Graphics card	- Intel® Arc Graphics - HDMI 2.0 port supports 4K (4096 x 2160 @ 60Hz)- DP 2.1 port supports 8K (7680 x 4320 @ 60Hz) - Type-C port supports 8K (7680 x 4320 @ 60Hz)
structure	- Mini-ITX form factor: 6.7-in, 17.0 cm x 17.0 cm - Solid-state capacitor design
Operating system	- Supports Microsoft Windows 10/11 64-bit - Compatible with Linux - * Supports EFI mode only
Motherboard size	-170mm * 170mm -Standard iTX form factor, radiator holes compatible with LGA115X & LGA1700

Specifications	
Front I/O interface	- 1 * USB4 (Type-C) 40G - 1 * USB 3.0 - 1 * HDMI 2.0 - 1 * DP 2.1 - 2 * 5G RJ45 ports - 1 * 10G RJ45 port - 1 * 2.5G RJ45 vPro port - 1 * CLR_CMOS - 1 * Audio port - 1 * TF card port
Internal I/O interface	-1 * F_PANEL - 1 * USB 3.0 female connector - 1 * USB 2.0 pin header - 1 * TYPE-E female connector - 2 * M.2 NVMe 2280 - 1 * M.2 cnvi Wi-Fi - 3 * System fans - 3 * SFF-8643 connectors - 1 * COM pin header - 1 * SATA 3.0 - 1 * CLR_CMOS pin header - 1 * USB power-off pin header - 1 * PCI-Ex8 expansion slot - 1 * ATX-24-pin power supply - 1 * ATX-4-pin power supply - 2 * SO-DIMM DDR5 memory slots - 1 * Auto-boot jumper for incoming power - 1 * eDP port - 1 * GPIO pin header - 1 * SATA power supply - 1 * CPU fan - 1 * Motherboard battery

Product Model: NAS-MTL-10G

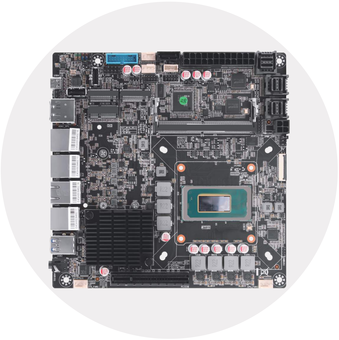

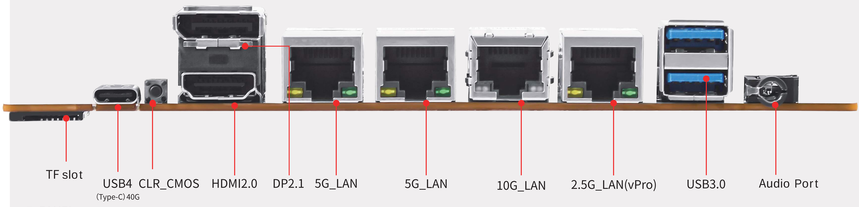

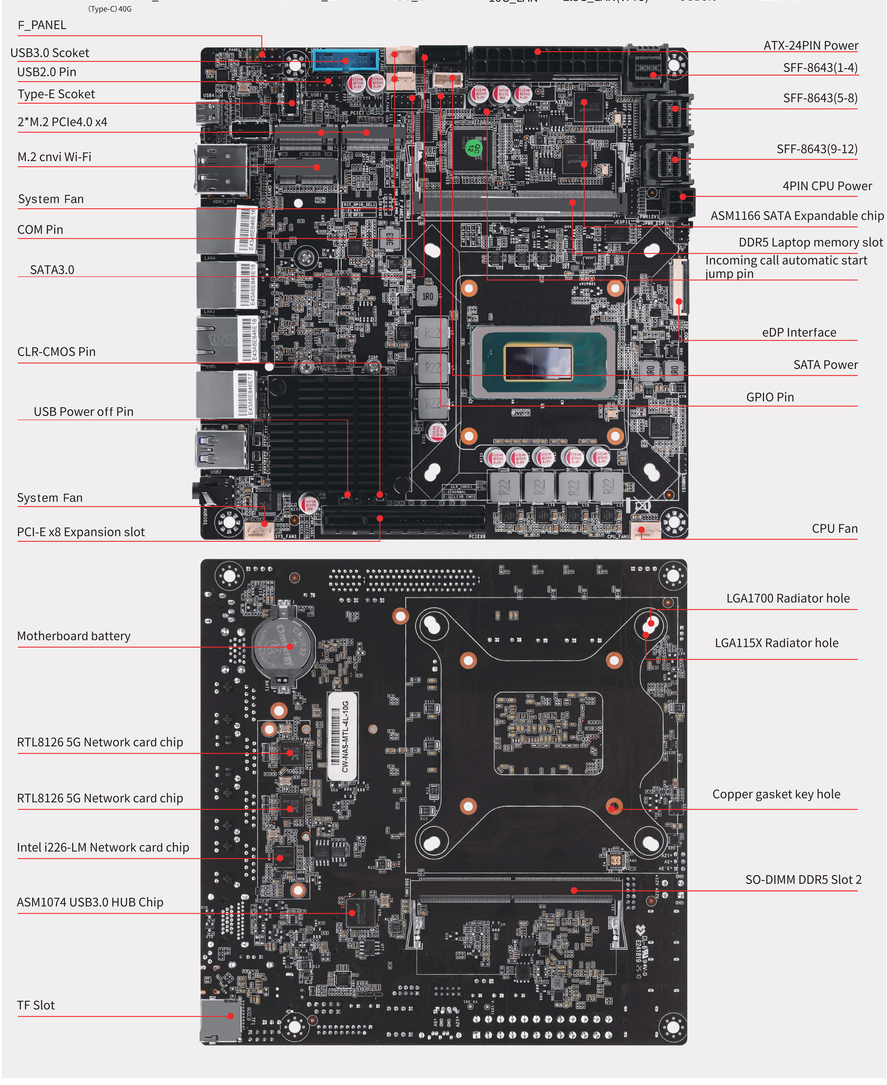
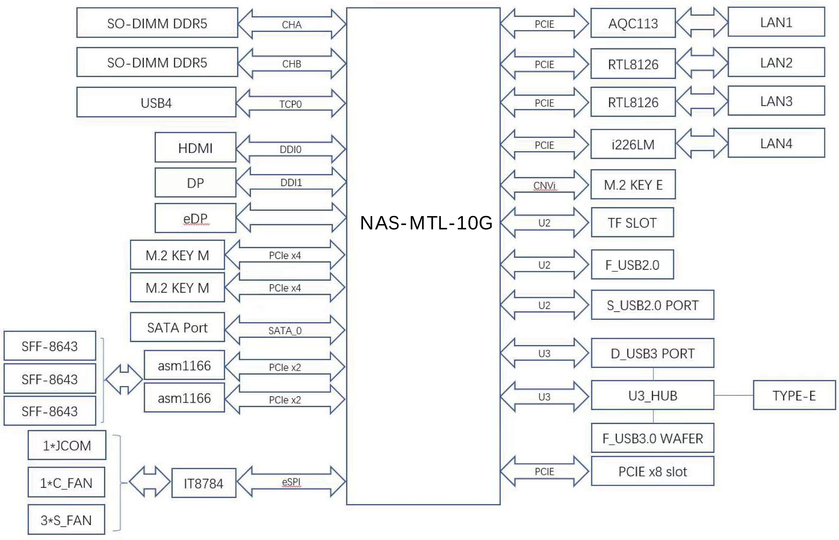
PCIE Structure diagram